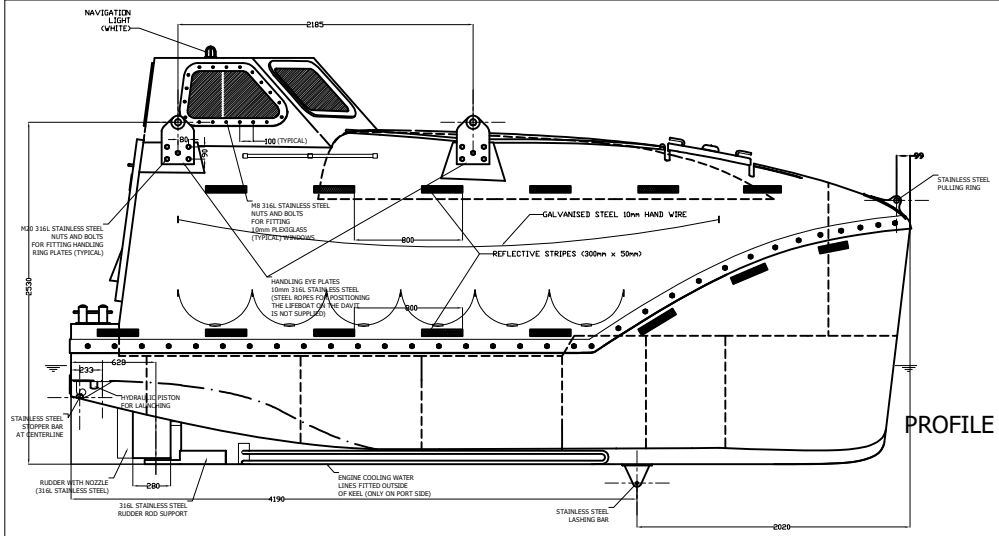

PROFILE VIEW

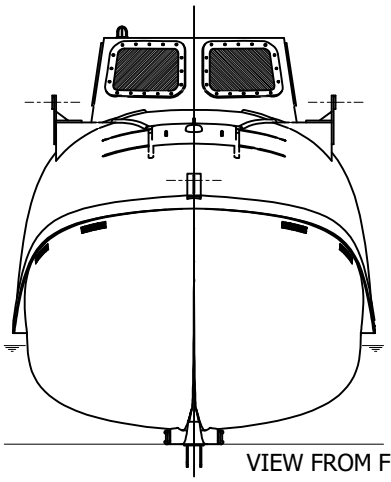

VIEW FROM FORE

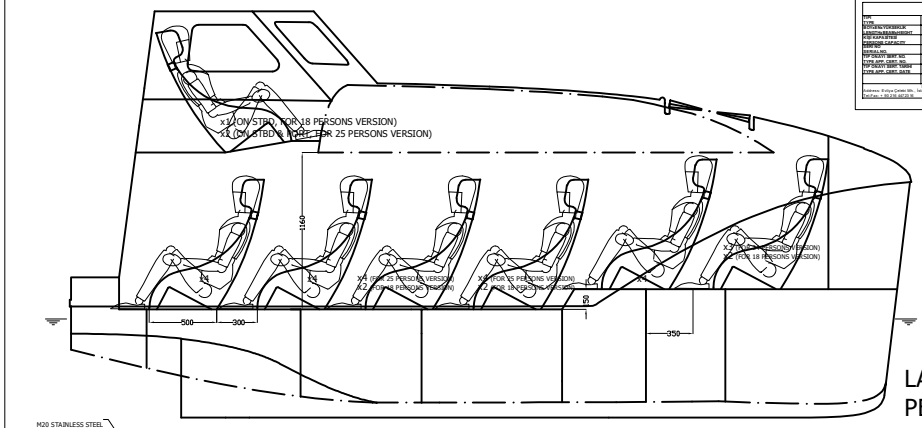

LAYOUT OF PEOPLE(PROFILE)

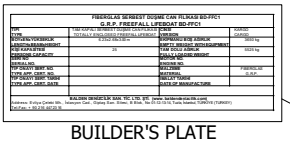

FIBERGLAS DERİNİZİ DÜŞME CAN FİLİKASI BD-FFC1			
G.R.P. FREEFALL LIFEBOAT BD-FFC1			
TYPE	YAN KAPAKLI DERİNİZİ DÜŞME CAN FİLİKASI	CREW	2/25/2007
NAME	TOTALLY ENCLOSED FREEFALL LIFEBOAT	NUMBER	101
MAXIMUM POWERED LAUNCHING REQUIREMENT	6.23m x 2.68m x 0.73m	MAXIMUM STATIC STANDING WAYS REQUIREMENT	3000 kg
PER KAPASİTESİ	25	TAM DOLU AĞIRLIK	5525 kg
MAXIMUM CAPACITY		FULLY LOADED WEIGHT	
MOTOR		ENGINE NO	
SERİALİ NO		ENGINE SERIAL NO	
TAM DOLU AĞIRLIK		WEIGHT	3650kg-25
FULLY LOADED WEIGHT		WEIGHT	25 P
MAKİNA DAİRESİ HACMİ		MACHINERY VOLUME	
MACHINERY SPACE VOLUME			
İMİ APP. CERT. DATE		DATE OF MANUFACTURE	
BALDEN DENİZCİLİK SAN. TİC. LTD. ŞTİ. (www.baldendenizcilik.com)			
Adresimiz: Evdışı Çeşme Mah. Ankaryolu Cad. Çağlayı Eşen. Sitesi, B Blok, No:27/C-D/E Tuzla İstanbul TURKİYE (TURKEY)			
Cep/Fax: (+90 216) 397 07 81			

BUILDER'S PLATE

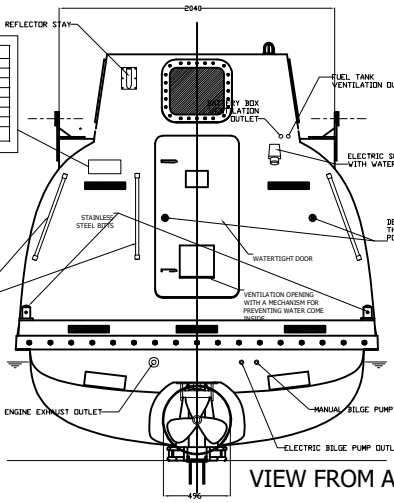

VIEW FROM AFT

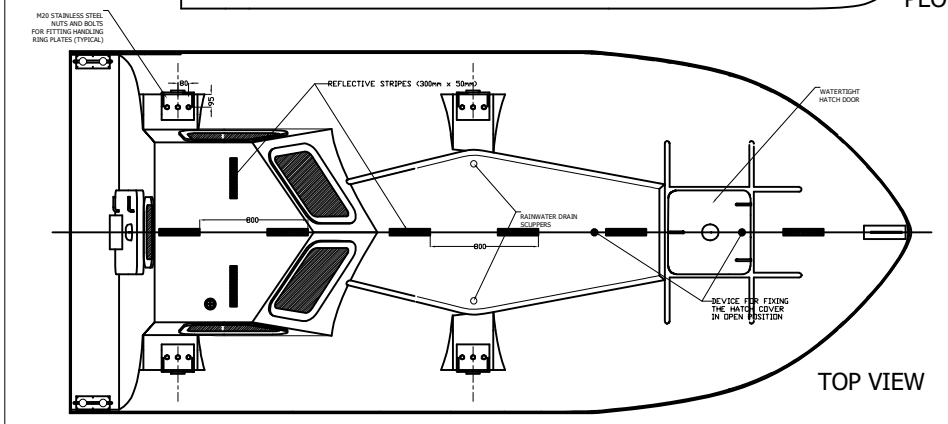

TOP VIEW

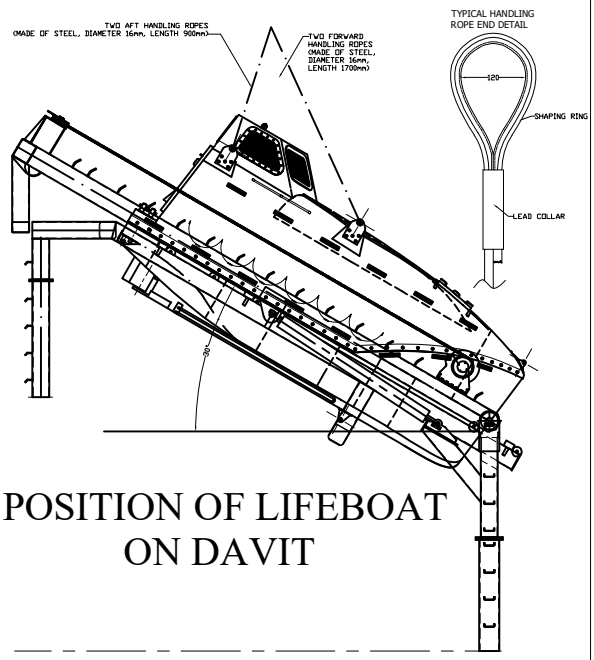

POSITION OF LIFEBOAT ON DAVIT

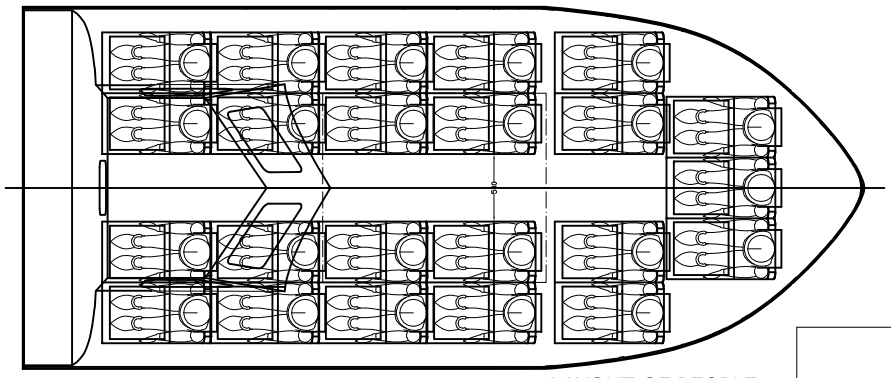

LAYOUT OF PEOPLE (FROM TOP)

SEAT DETAIL (TYPICAL)

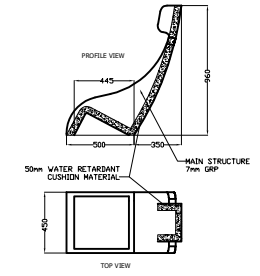

MAIN PARTICULARS

Loa:	6.23m
Boa:	2.68m
HEIGHT:	3.0m
DRAUGHT:	0.73m
PASSENGER CAPACITY:	25 persons

WEIGHTS (FULLY EQUIPPED)

NO PASSENGERS:	3650kg
WITH PASSENGERS:	5525kg

BALDEN FREEFALL LIFEBOAT BD-FFC1

GENERAL VIEW AND LAYOUT PLAN

DESIGNED BY	Bülent AYSUL	MANUFACTURER			
CAD/CAE	Bülent AYSUL	BALDEN DENİZCİLİK SAN. TİC. LTD. ŞTİ.			
CHECKED BY	İsmail Önel				
CLASS	SCALE	DATE	PROJECT NR.	DRAW. NR	HULL NR.
R.I.Na	1 / 20	08.09.2006	101	FLBC-101	-